# MITTO 2 LED



## Technical drawings

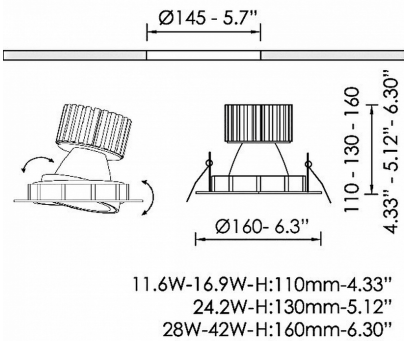


11.6W-16.9W-H:110mm-4.33"
24.2W-H:130mm-5.12"
28W-42W-H:160mm-6.30"

## Product Details

CE LM80 LM79 TM21 REACH Source Type COB LED

### General Information

| | |
|---|---|
| Housing | Aluminium |
| Product code | DL7310CL001ON |
| Product family | MITTO |
| Diffuser | Clear Polycarbonate |
| Control Gear | Remote Electronic Driver |
| Options for Dimming Control | On-Off |
| Height | 160 mm |
| Diameter | 160 mm |

### Electrical data

| | |
|---|---|
| Consumption | 31,1 W |
| Performance | 101.51 lm/W |
| Ripple | 3 |
| Power Factor | 0.96 |
| Nominal Voltage | 34.6 V |

### Luminaire Output

| | |
|---|---|
| Beam Type | NM |
| Beam | 24º |
| Luminous Flux | 3157 lm |
| CRI CCT | 935 |
| Glare Indicator Ugr Longwise Optics | 17 |
| Glare Indicator Ugr Parallel Optics | 17 |

### Light distribution

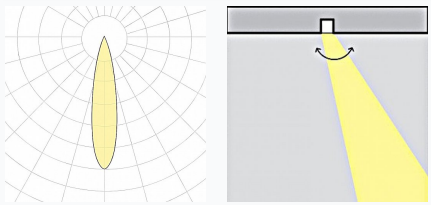

### Safety characteristics

| | |
|---|---|
| IK | 07 |
| IP | 20 |
| Protection Class | Class III |

### Temperature Operating Conditions

| | |
|---|---|
| Lifetime | >60.000h L80B10@35°C |
| Operating Ambient Temperature | -10...+45°C |
| Operating Humidity Level | 5...95% |