MOBILIS LED



Technical drawings

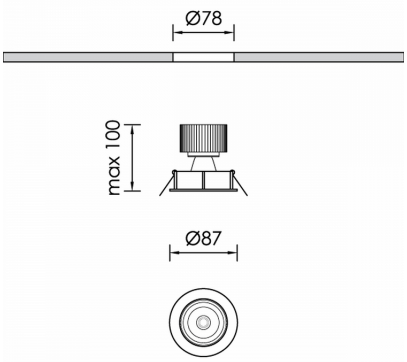

Product Details

CE LM80 LM79 TM21 REACH Source Type COB LED

General Information

Housing	Aluminium
Product code	DL7367CL002DA
Product family	MOBILIS
Control Gear	Remote Electronic Driver
Options for Dimming Control	DALI2
Height	100 mm
Diameter	87 mm

Electrical data

Consumption	9,2 W
Performance	106.2 lm/W
Ripple	3
Power Factor	0.96
Nominal Voltage	34.6 V

Luminaire Output

Beam Type	ASY
Beam	-
Luminous Flux	977 lm
CRI CCT	935
Glare Indicator Ugr Longwise Optics	27
Glare Indicator Ugr Parallel Optics	27

Light distribution

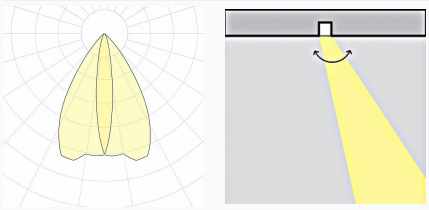

Safety characteristics

IK	05
IP	20
Protection Class	Class III

Temperature Operating Conditions

Lifetime	>60.000h L80B10@35°C
Operating Ambient Temperature	-10...+45°C
Operating Humidity Level	5...95%