# MOBILIS SQUARE LED



## Technical drawings

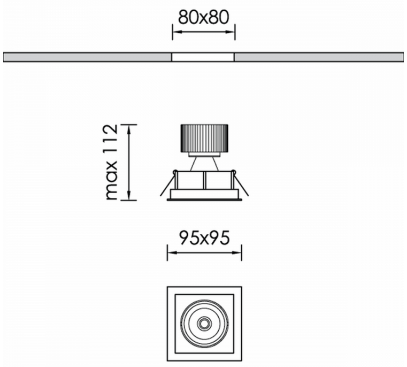


## Product Details

CE LM80 LM79 TM21 REACH Source Type COB LED

### General Information

| | |
|---|---|
| Housing | Aluminium |
| Product code | DL7402CL002ON |
| Product family | MOBILIS |
| Control Gear | Remote Electronic Driver |
| Options for Dimming Control | On-Off |
| Width | 95 mm |
| Length | 95 mm |
| Height | 112 mm |

### Electrical data

| | |
|---|---|
| Consumption | 9.2 W |
| Performance | 106.2 lm/W |
| Ripple | 3 |

### Luminaire Output

| | |
|---|---|
| Beam Type | ASY |
| Beam | - |
| Luminous Flux | 977 lm |
| CRI CCT | 935 |

### Light distribution

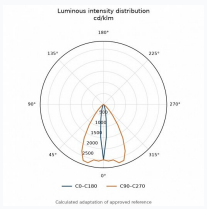


### Safety characteristics

| | |
|---|---|
| IK | 03 |
| IP | 20 |
| Protection Class | Class III |

### Temperature Operating Conditions