MOBILIS SQUARE LED



Technical drawings

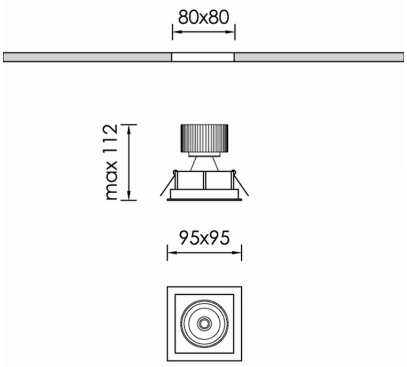

Product Details

CE LM80 LM79 TM21 REACH Source Type COB LED

General Information

Housing	Aluminium
Product code	DL7402CL002DAC
Product family	MOBILIS
Control Gear	Remote Electronic Driver
Options for Dimming Control	DALI2
Options for Wireless Dimming	Casambi
Width	95 mm
Length	95 mm
Height	112 mm

Electrical data

Consumption	9.2 W
Performance	106.2 lm/W
Ripple	3

Luminaire Output

Beam Type	ASY
Beam	-
Luminous Flux	977 lm
CRI CCT	935

Light distribution

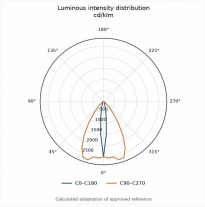

Safety characteristics

IK	03
IP	20
Protection Class	Class III

Temperature Operating Conditions