RITUS 20



Technical drawings

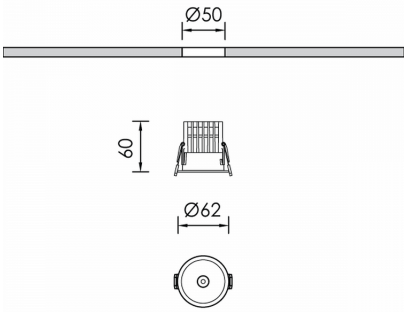

Product Details

CE

Source Type COB LED

General Information

Housing	Aluminium
Product code	DL7665CL001ON
Product family	RITUS
Control Gear	Remote Electronic Driver
Options for Dimming Control	On-Off
Height	60 mm
Diameter	62 mm

Electrical data

Consumption	6 W
Performance	39.67 lm/W
Nominal Voltage	230 V

Luminaire Output

Beam Type	W
Beam	36º
Luminous Flux	238 lm
CRI CCT	935

Light distribution

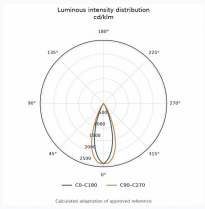

Safety characteristics

IK	04
IP	54

Temperature Operating Conditions