SPOT IP54 LED



Technical drawings

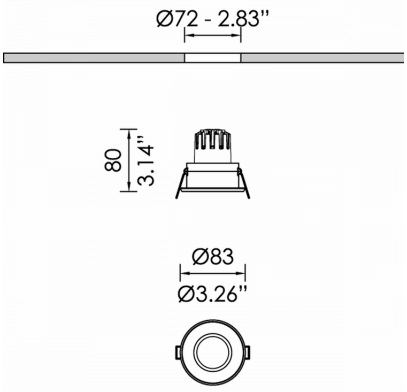

Product Details

CE LM80 LM79 TM21 REACH Source Type COB LED

General Information

Housing	Metal
Product code	DL7692CL001
Product family	SPOT IP54
Diffuser	Safety Glass Sandblast
Height	80 mm
Diameter	83 mm

Electrical data

Consumption	6 W
Performance	84.83 lm/W
Ripple	3
Power Factor	0.96

Luminaire Output

Beam Type	N
Beam	17º
Luminous Flux	509 lm
CRI CCT	935

Light distribution



Safety characteristics

IK	05
IP	54
Protection Class	Class I

Temperature Operating Conditions

Operating Ambient Temperature	-10...+45°C
Operating Humidity Level	5...95%