# STATUS 1F LED



## Technical drawings

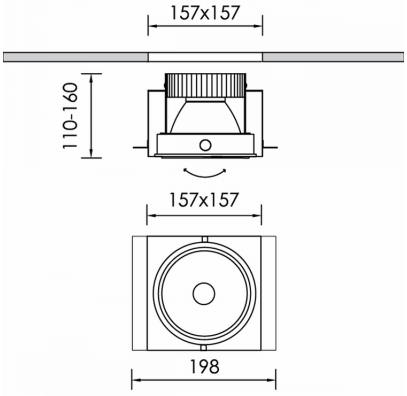


## Product Details

CE LM80 LM79 TM21 REACH Source Type COB LED

### General Information

| | |
|---|---|
| Housing | Μέταλλο, Αλουμίνιο |
| Product code | DL7719CL001DAC |
| Product family | STATUS |
| Control Gear | Remote Electronic Driver |
| Options for Dimming Control | DALI2 |
| Options for Wireless Dimming | Casambi |
| Width | 157 mm |
| Length | 198 mm |
| Height | 160 mm |

### Electrical data

| | |
|---|---|
| Consumption | 31,1 W |
| Performance | 101.51 lm/W |
| Ripple | 3 |
| Power Factor | 0.96 |
| Nominal Voltage | 34.6 V |

### Luminaire Output

| | |
|---|---|
| Beam Type | N |
| Beam | 15º |
| Luminous Flux | 3157 lm |
| CRI CCT | 935 |

### Light distribution

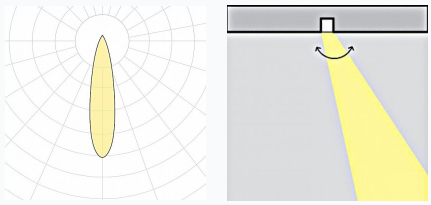

### Safety characteristics

| | |
|---|---|
| IK | 07 |
| IP | 20 |
| Protection Class | Class III |

### Temperature Operating Conditions

| | |
|---|---|
| Lifetime | >60.000h L80B10@35°C |
| Operating Ambient Temperature | -10...+45°C |
| Operating Humidity Level | 5...95% |