STATUS 1F LED



Technical drawings

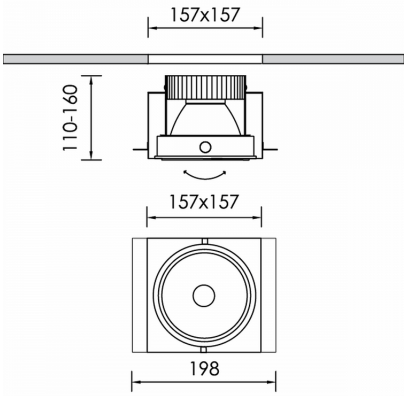

Product Details

CE LM80 LM79 TM21 REACH Source Type COB LED

General Information

Housing	Μέταλλο, Αλουμίνιο
Product code	DL7723CL003DA
Product family	STATUS
Control Gear	Remote Electronic Driver
Options for Dimming Control	DALI2
Width	157 mm
Length	198 mm
Height	160 mm

Electrical data

Consumption	12,8 W
Performance	116.8 lm/W
Ripple	3
Power Factor	0.96
Nominal Voltage	34.6 V

Luminaire Output

Beam Type	NM
Beam	24º
Luminous Flux	1495 lm
CRI CCT	935

Light distribution

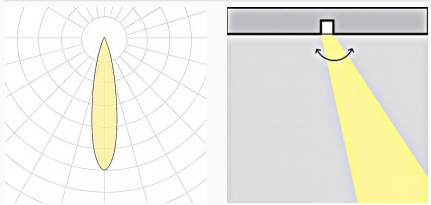

Safety characteristics

IK	07
IP	20
Protection Class	Class III

Temperature Operating Conditions

Lifetime	>60.000h L80B10@35°C
Operating Ambient Temperature	-10...+45°C
Operating Humidity Level	5...95%