STATUS 2F H.P.LED



Technical drawings

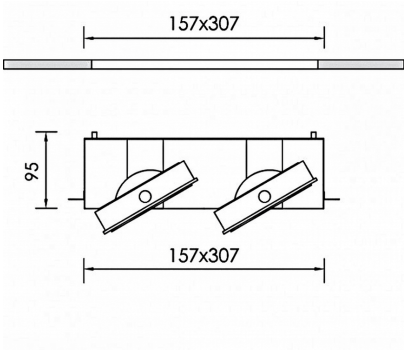

Product Details

CE LM80 LM79 TM21 REACH Source Type H.P. LED

General Information

Housing	Μέταλλο, Αλουμίνιο
Product code	DL7746CL003DAC
Product family	STATUS
Diffuser	Clear Polycarbonate
Control Gear	Remote Electronic Driver
Options for Dimming Control	DALI2
Options for Wireless Dimming	Casambi
Width	157 mm
Length	307 mm
Height	95 mm

Electrical data

Consumption	15,6 W
Performance	104.42 lm/W
Ripple	3
Power Factor	0.96
Nominal Voltage	2x21 V

Luminaire Output

Beam Type	NM
Beam	25º
Luminous Flux	1629 lm
CRI CCT	935
Glare Indicator Ugr Longwise Optics	10
Glare Indicator Ugr Parallel Optics	9

Light distribution

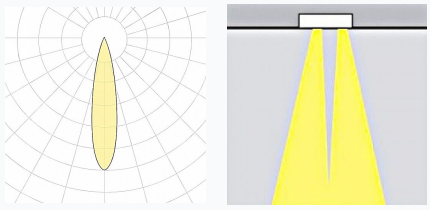

Safety characteristics

IK	07
IP	20
Protection Class	Class III

Temperature Operating Conditions

Lifetime	>60.000h L80B10@35°C
Operating Ambient Temperature	-10...+45°C
Operating Humidity Level	5...95%