VATES 17 LED



Technical drawings

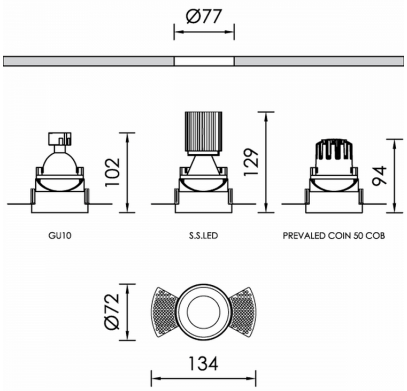

Product Details

CE LM80 LM79 TM21 REACH Source Type COB LED

General Information

Housing	Aluminium, Plastic
Product code	DL8371CL001DA
Product family	VATES
Diffuser	Reflector
Control Gear	Remote Electronic Driver
Options for Dimming Control	DALI2
Height	129 mm
Diameter	72 mm

Electrical data

Consumption	6 W
Performance	65.33 lm/W
Ripple	3
Power Factor	0.96
Nominal Voltage	34.6 V

Luminaire Output

Beam Type	NM
Beam	24º
Luminous Flux	392 lm
CRI CCT	935

Light distribution

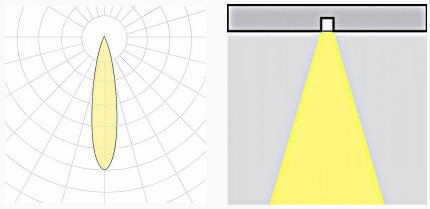

Safety characteristics

IK	04
IP	20
Protection Class	Class III

Temperature Operating Conditions

Lifetime	>60.000h L80B10@35°C
Operating Ambient Temperature	-10...+45°C
Operating Humidity Level	5...95%