# VATES 18 LED



## Technical drawings

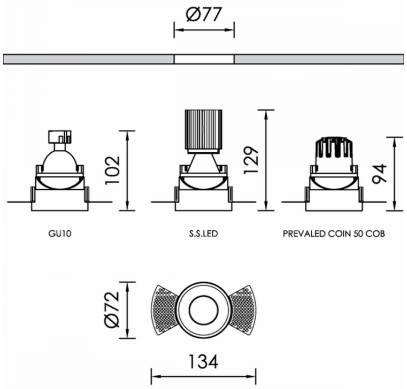


## Product Details

CE LM80 LM79 TM21 REACH Source Type COB LED

### General Information

| | |
|---|---|
| Housing | Aluminium, Plastic |
| Product code | DL8405CL001DA |
| Product family | VATES |
| Diffuser | Reflector |
| Control Gear | Remote Electronic Driver |
| Options for Dimming Control | DALI2 |
| Height | 129 mm |
| Diameter | 72 mm |

### Electrical data

| | |
|---|---|
| Consumption | 10,9 W |
| Performance | 59.82 lm/W |
| Ripple | 3 |
| Power Factor | 0.96 |
| Nominal Voltage | 34.6 V |

### Luminaire Output

| | |
|---|---|
| Beam Type | W |
| Beam | 40º |
| Luminous Flux | 652 lm |
| CRI CCT | 935 |

### Light distribution

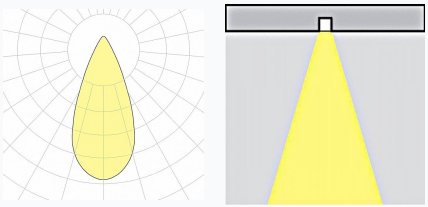

### Safety characteristics

| | |
|---|---|
| IK | 04 |
| IP | 20 |
| Protection Class | Class III |

### Temperature Operating Conditions

| | |
|---|---|
| Lifetime | >60.000h L80B10@35°C |
| Operating Ambient Temperature | -10...+45°C |
| Operating Humidity Level | 5...95% |