CERAM 4S H.P.LED



Technical drawings

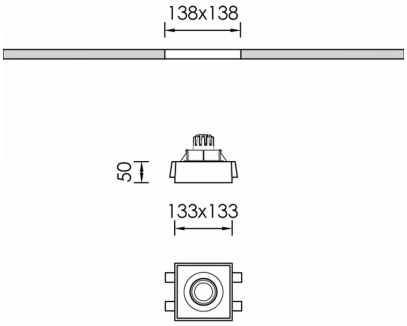

Product Details

CE LM80 LM79 TM21 REACH Source Type H.P. LED

General Information

Housing	Γύψος, Αλουμίνιο
Product code	DL8560CL001
Product family	CERAM
Width	133 mm
Length	133 mm
Height	50 mm

Electrical data

Consumption	4,9 W
Performance	95.31 lm/W
Ripple	3
Power Factor	0.96

Luminaire Output

Beam Type	W
Beam	45º
Luminous Flux	467 lm
CRI CCT	935

Light distribution



Safety characteristics

IK	02
IP	20

Temperature Operating Conditions

Operating Ambient Temperature	-10...+45°C
Operating Humidity Level	5...95%