STATUS 3F LED



Technical drawings

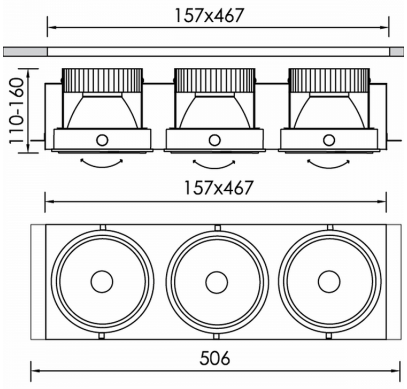

Product Details

CE LM80 LM79 TM21 REACH Source Type COB LED

General Information

Housing	Μέταλλο, Αλουμίνιο
Product code	DL8663CL002ON
Product family	STATUS
Diffuser	Clear Polycarbonate
Control Gear	Remote Electronic Driver
Options for Dimming Control	On-Off
Width	157 mm
Length	506 mm
Height	160 mm

Electrical data

Consumption	93,3 W
Performance	101.49 lm/W
Ripple	3
Power Factor	0.96
Nominal Voltage	3x34,6 V

Luminaire Output

Beam Type	XW
Beam	60º
Luminous Flux	9469 lm
CRI CCT	935
Glare Indicator Ugr Longwise Optics	17
Glare Indicator Ugr Parallel Optics	16

Light distribution

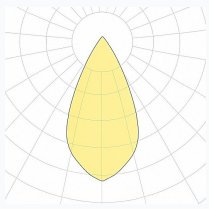

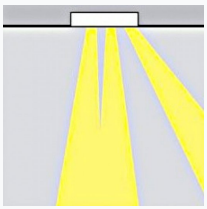

Safety characteristics

IK	07
IP	20
Protection Class	Class III

Temperature Operating Conditions

Lifetime	>60.000h L80B10@35°C
Operating Ambient Temperature	-10...+45°C
Operating Humidity Level	5...95%