PLANUS 4 LED



Technical drawings

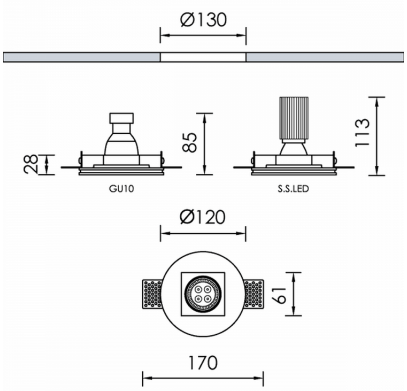

Product Details

CE LM80 LM79 TM21 REACH Source Type COB LED

General Information

Housing	Plaster
Product code	DL8733DA
Product family	PLANUS
Control Gear	Remote Electronic Driver
Options for Dimming Control	DALI2
Height	113 mm
Diameter	120 mm

Electrical data

Consumption	8,3 W
Performance	107.47 lm/W
Ripple	3
Power Factor	0.96
Nominal Voltage	34.6 V

Luminaire Output

Beam Type	NM
Beam	24º
Luminous Flux	892 lm
CRI CCT	935

Light distribution

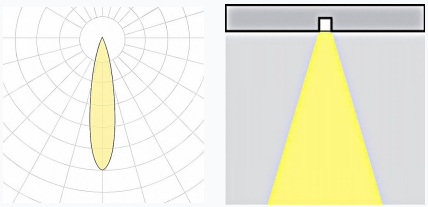

Safety characteristics

IK	03
IP	20
Protection Class	Class III

Temperature Operating Conditions

Lifetime	>60.000h L80B10@35°C
Operating Ambient Temperature	-10...+45°C
Operating Humidity Level	5...95%