PLANUS 4 LED



Technical drawings

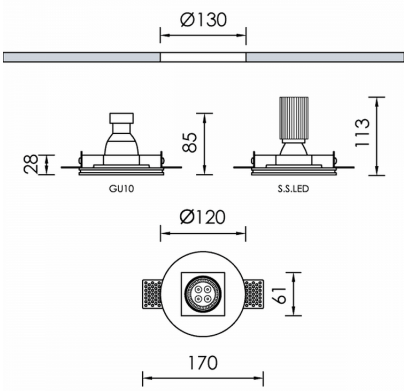

Product Details

CE LM80 LM79 TM21 REACH Source Type COB LED

General Information

Housing	Plaster
Product code	DL8741ON
Product family	PLANUS
Control Gear	Remote Electronic Driver
Options for Dimming Control	On-Off
Height	113 mm
Diameter	120 mm

Electrical data

Consumption	9,2 W
Performance	104.89 lm/W
Ripple	3
Power Factor	0.96
Nominal Voltage	34.6 V

Luminaire Output

Beam Type	M
Beam	36º
Luminous Flux	965 lm
CRI CCT	935

Light distribution

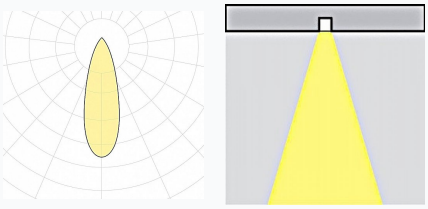

Safety characteristics

IK	03
IP	20
Protection Class	Class III

Temperature Operating Conditions

Lifetime	>60.000h L80B10@35°C
Operating Ambient Temperature	-10...+45°C
Operating Humidity Level	5...95%