HEADOFFICE: Showroom 13 Sofokli Venizelou Ave., Likovrisi, P.O. Box 14123, Athens, Greece Tel: (+30) 210 2851 304 I www.bright.gr I info@bright.gr

RITUS 60 MOB IP65 TRIMLESS



Technical drawings

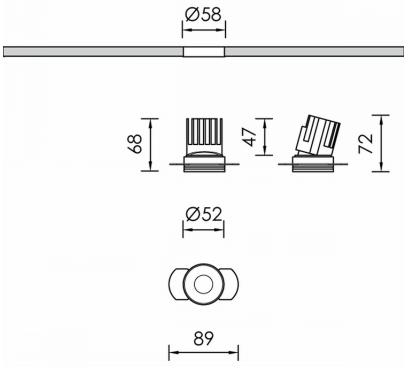

Product Details

CE LM80 LM79 TM21 REACH Source Type COB LED

General Information

Housing	Aluminium
Product code	DL8901CL001ON
Product family	RITUS
Control Gear	Remote Electronic Driver
Options for Dimming Control	On-Off
Height	72 mm
Diameter	52 mm

Electrical data

Consumption	6 W
Performance	100 lm/W
Nominal Voltage	230 V

Luminaire Output

Beam Type	M
Beam	36º
Luminous Flux	600 lm
CRI CCT	927

Light distribution

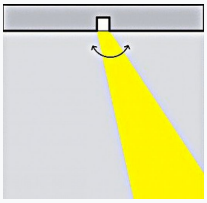

Safety characteristics

IK	04
IP	65

Temperature Operating Conditions