RITUS 60 MOB IP65



Technical drawings

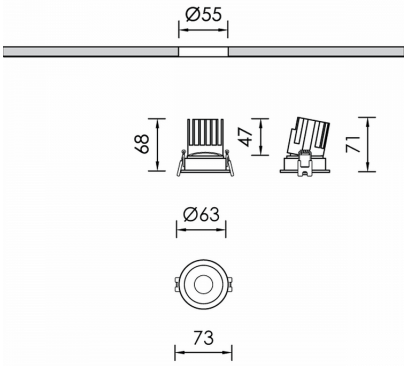

Product Details

CE LM80 LM79 TM21 REACH Source Type COB LED

General Information

Housing	Aluminium
Product code	DL8923CL001DA
Product family	RITUS
Control Gear	Remote Electronic Driver
Options for Dimming Control	DALI2
Height	71 mm
Diameter	73 mm

Electrical data

Consumption	6 W
Performance	100 lm/W
Nominal Voltage	230 V

Luminaire Output

Beam Type	N
Beam	24º
Luminous Flux	600 lm
CRI CCT	935

Light distribution

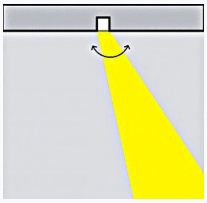

Safety characteristics

IK	04
IP	65

Temperature Operating Conditions