# RITUS 60 MOB IP65



## Technical drawings

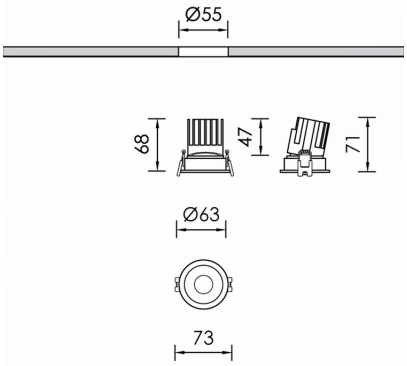


## Product Details

CE LM80 LM79 TM21 REACH Source Type COB LED

### General Information

| | |
|---|---|
| Housing | Aluminium |
| Product code | DL8920CL001DAC |
| Product family | RITUS |
| Control Gear | Remote Electronic Driver |
| Options for Dimming Control | DALI2 |
| Options for Wireless Dimming | Casambi |
| Height | 71 mm |
| Diameter | 73 mm |

### Electrical data

| | |
|---|---|
| Consumption | 6 W |
| Performance | 100 lm/W |
| Nominal Voltage | 230 V |

### Luminaire Output

| | |
|---|---|
| Beam Type | M |
| Beam | 36º |
| Luminous Flux | 600 lm |
| CRI CCT | 930 |

### Light distribution

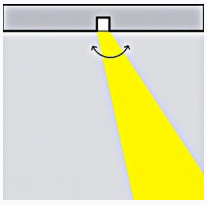

### Safety characteristics

| | |
|---|---|
| IK | 04 |
| IP | 65 |

### Temperature Operating Conditions