HEADOFFICE: Showroom 13 Sofokli Venizelou Ave., Likovrisi, P.O. Box 14123, Athens, Greece Tel: (+30) 210 2851 304 I www.bright.gr I info@bright.gr

COMIS 14 DOWN



Technical drawings

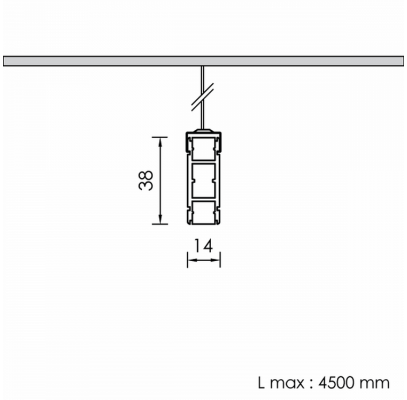

Product Details

CE LM80 LM79 TM21 REACH Source Type Linear LED

General Information

Housing	Aluminium
Product code	PRS1985CL143DAC
Product family	COMIS
Control Gear	Remote Electronic Driver
Options for Dimming Control	DALI2
Options for Wireless Dimming	Casambi
Width	14 mm
Length	1000 mm
Height	38 mm

Electrical data

Consumption	10.5 W
Performance	49.62 lm/W
Ripple	3
Power Factor	0.96
Nominal Voltage	230 V

Luminaire Output

Beam Type	VW
Beam	110º
Luminous Flux	521 lm
CRI CCT	930

Light distribution

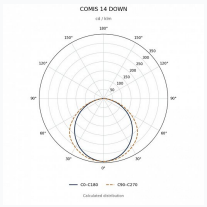

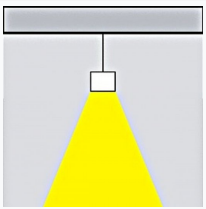

Safety characteristics

IK	05
IP	65

Temperature Operating Conditions

Operating Ambient Temperature	-10...+45°C
Operating Humidity Level	5...95%