COMIS 14 RING DOWN



Technical drawings

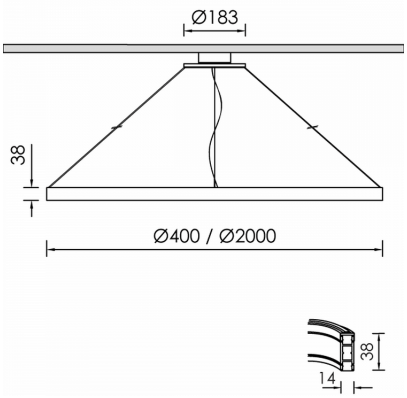

Product Details

CE LM80 LM79 TM21 REACH Source Type Linear LED

General Information

Housing	Aluminium
Product code	PRS2007CL143DA
Product family	COMIS
Control Gear	Remote Electronic Driver
Options for Dimming Control	DALI2
Height	38 mm
Diameter	2000 mm

Electrical data

Consumption	65.97 W
Performance	51.61 lm/W
Ripple	3
Power Factor	0.96
Nominal Voltage	230 V

Luminaire Output

Beam Type	VW
Beam	110º
Luminous Flux	3405 lm
CRI CCT	940

Light distribution

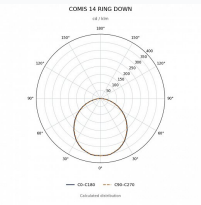

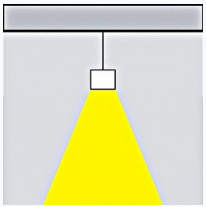

Safety characteristics

IK	05
IP	65

Temperature Operating Conditions

Operating Ambient Temperature	-10...+45°C
Operating Humidity Level	5...95%