TERES 1 LED



Technical drawings

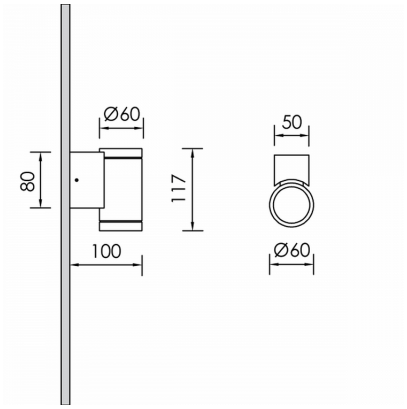

Product Details

CE LM80 LM79 TM21 REACH Source Type H.P. LED

General Information

Housing	Aluminium
Product code	WF9004CL002ON
Product family	TERES
Diffuser	Safety Glass Clear
Options for Dimming Control	On-Off
Width	60 mm
Length	117 mm
Height	100 mm

Electrical data

Consumption	3.36 W
Performance	105.65 lm/W

Luminaire Output

Beam Type	NM
Beam	25º
Luminous Flux	355 lm
CRI CCT	930

Light distribution

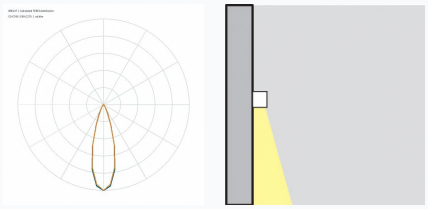

Safety characteristics

IK	07
IP	64

Temperature Operating Conditions