# TERES 1 LED



## Technical drawings

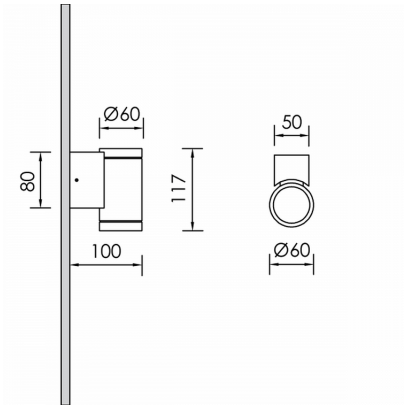


## Product Details

CE LM80 LM79 TM21 REACH Source Type H.P. LED

### General Information

| | |
|---|---|
| Housing | Aluminium |
| Product code | WF9005CL009ON |
| Product family | TERES |
| Diffuser | Safety Glass Clear |
| Options for Dimming Control | On-Off |
| Width | 60 mm |
| Length | 117 mm |
| Height | 100 mm |

### Electrical data

| | |
|---|---|
| Consumption | 3.36 W |
| Performance | 105.65 lm/W |

### Luminaire Output

| | |
|---|---|
| Beam Type | W |
| Beam | 45º |
| Luminous Flux | 355 lm |
| CRI CCT | 930 |

### Light distribution

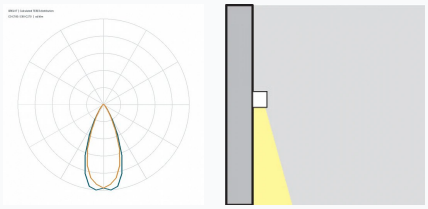

### Safety characteristics

| | |
|---|---|
| IK | 07 |
| IP | 64 |

### Temperature Operating Conditions