HEADOFFICE: Showroom 13 Sofokli Venizelou Ave., Likovrisi, P.O. Box 14123, Athens, Greece Tel: (+30) 210 2851 304 I www.bright.gr I info@bright.gr

# TERES 1 BRASS LED

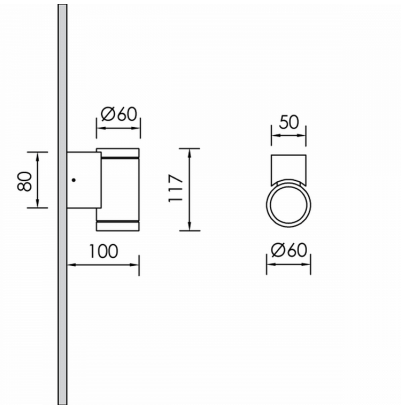


## Technical drawings

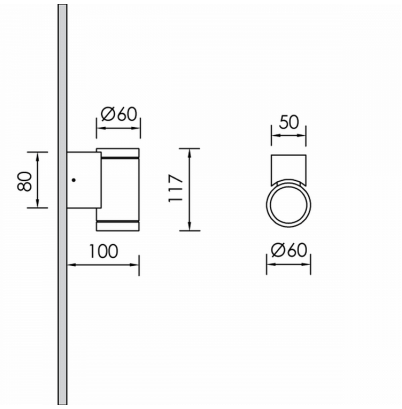


## Product Details

CE LM80 LM79 TM21 REACH Source Type H.P. LED

### General Information

| | |
|---|---|
| Housing | Aluminium |
| Product code | WF9033CL003ON |
| Product family | TERES |
| Diffuser | Safety Glass Clear |
| Options for Dimming Control | On-Off |
| Width | 60 mm |
| Length | 117 mm |
| Height | 100 mm |

### Electrical data

| | |
|---|---|
| Consumption | 4.86 W |
| Performance | 108.64 lm/W |

### Luminaire Output

| | |
|---|---|
| Beam Type | UN |
| Beam | 8º |
| Luminous Flux | 528 lm |
| CRI CCT | 940 |

### Light distribution

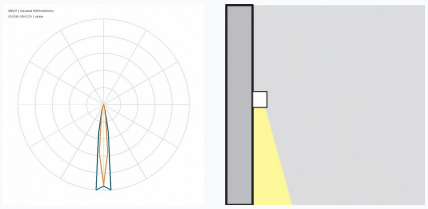

### Safety characteristics

| | |
|---|---|
| IK | 07 |
| IP | 64 |

### Temperature Operating Conditions