TERES 1 UNO BRASS LED

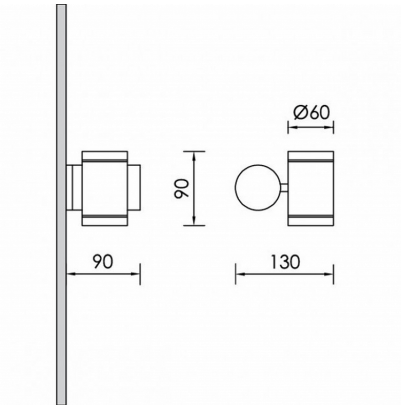

Technical drawings

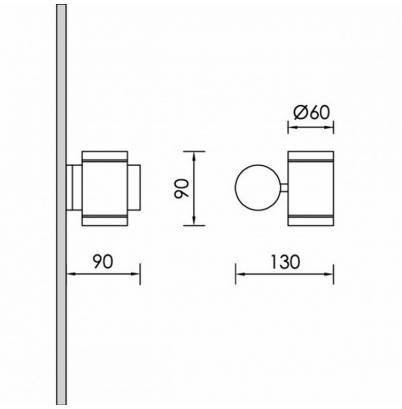

Product Details

CE LM80 LM79 TM21 REACH Source Type H.P. LED

General Information

Housing	Brass
Product code	WF9074CL009ON
Product family	TERES
Diffuser	Safety Glass Clear
Options for Dimming Control	On-Off
Width	90 mm
Length	130 mm
Height	90 mm

Electrical data

Consumption	3.36 W
Performance	100.6 lm/W

Luminaire Output

Beam Type	W
Beam	45º
Luminous Flux	338 lm
CRI CCT	927

Light distribution

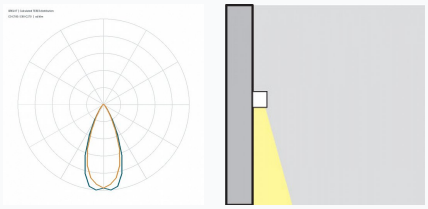

Safety characteristics

IK	07
IP	64

Temperature Operating Conditions