NOTUS 25 IN



Technical drawings

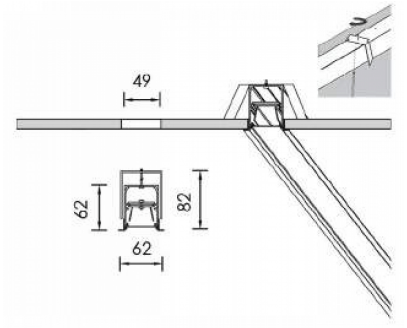

Product Details

CE LM80 LM79 TM21 REACH Source Type Linear LED

General Information

Housing	Aluminium
Product code	PRR0821CL002DA
Product family	NOTUS
Diffuser	Anti-Glare PC Shade
Control Gear	Built-in ECG
Options for Dimming Control	DALI2
Width	62 mm
Length	3123 mm
Height	82 mm

Electrical data

Consumption	62,3 W
Performance	80.14 lm/W
Ripple	3
Power Factor	0.96
Nominal Voltage	230 V

Luminaire Output

Beam Type	VW
Beam	105º
Luminous Flux	4993 lm
CRI CCT	940
Glare Indicator Ugr Longwise Optics	24
Glare Indicator Ugr Parallel Optics	25

Light distribution

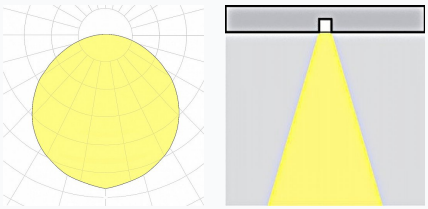

Safety characteristics

IK	04
IP	54
Protection Class	Class I

Temperature Operating Conditions

Lifetime	>80.000h L80B10@35°C
Operating Ambient Temperature	-10...+45°C
Operating Humidity Level	5...95%