NOTUS 11 ASYMMETRIC



Technical drawings

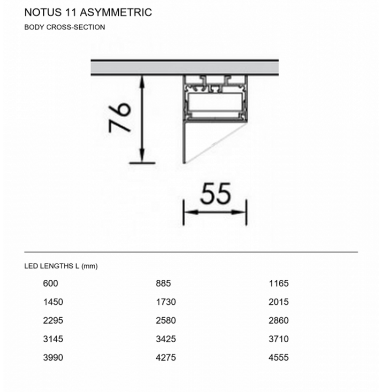

Product Details

CE LM80 LM79 TM21 REACH Source Type Linear LED

General Information

Housing	Aluminium
Product code	PRC1828CL001ON
Product family	NOTUS
Control Gear	Built-in ECG
Options for Dimming Control	On-Off
Width	55 mm
Length	3990 mm
Height	76 mm

Electrical data

Consumption	120,5 W
Performance	127.05 lm/W
Ripple	3
Power Factor	0.96
Nominal Voltage	230 V

Luminaire Output

Beam Type	ASY
Luminous Flux	15310 lm
CRI CCT	940

Light distribution

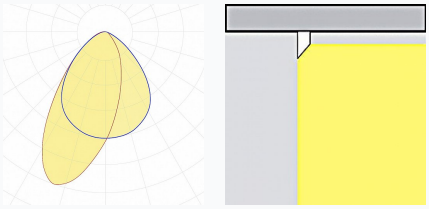

Safety characteristics

IK	06
IP	30
Protection Class	Class I

Temperature Operating Conditions

Lifetime	>80.000h L80B10@35°C
Operating Ambient Temperature	-10...+45°C
Operating Humidity Level	5...95%