SEDO 7 CURA SP



Technical drawings

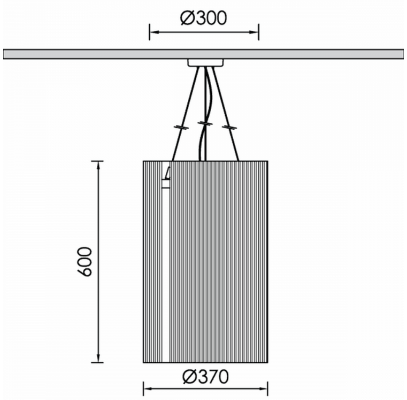

Product Details

CE LM80 LM79 TM21 REACH Source Type COB LED

General Information

Housing	Acoustic Panel
Product code	PRA0613CL018ON
Product family	CURA
Diffuser	PMMA
Control Gear	Built-in ECG
Options for Dimming Control	On-Off
Height	600 mm
Diameter	370 mm

Electrical data

Consumption	24 W
Performance	127 lm/W
Ripple	3
Power Factor	0.96
Nominal Voltage	230 V

Luminaire Output

Beam Type	VW
Beam	110º
Luminous Flux	3048 lm

Light distribution

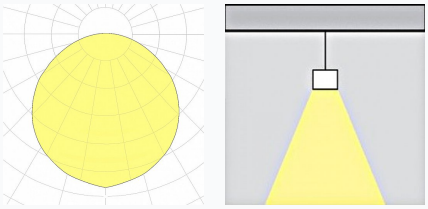

Safety characteristics

IK	03
IP	20
Protection Class	Class I

Temperature Operating Conditions

Operating Ambient Temperature	-10...+45°C
Operating Humidity Level	5...95%