SEDO SQUARE SP



Technical drawings

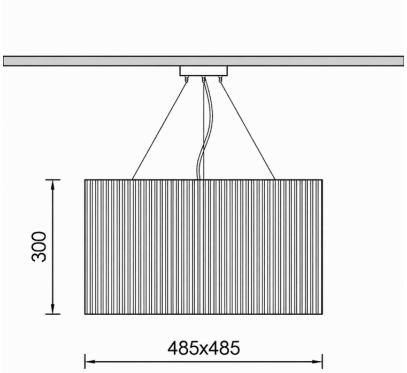

Product Details

CE

Source Type SMD LED

General Information

Housing	Aluminium, Acoustic panel
Product code	PRA0594CL017DA
Product family	SEDO
Diffuser	Opal Polycarbonate
Options for Dimming Control	DALI2
Width	485 mm
Length	485 mm
Height	300 mm

Electrical data

Consumption	33.33 W
Performance	81.61 lm/W
Nominal Voltage	230 V

Luminaire Output

Beam Type	VW
Beam	115º
Luminous Flux	2720 lm
CRI CCT	830

Light distribution

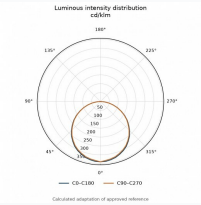

Safety characteristics

IK	03
IP	20
Protection Class	Class I

Temperature Operating Conditions