VERTO A SP



Technical drawings

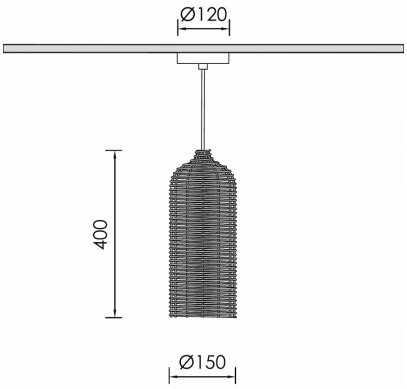

Product Details

Source Type E27 lamp

General Information

Housing	Natural rattan
Product code	DES0399CL010
Product family	VERTO
Height	400 mm
Diameter	150 mm

Electrical data

Luminaire Output

Light distribution

Safety characteristics

IP	20

Temperature Operating Conditions