# VERTO 30



Technical drawings

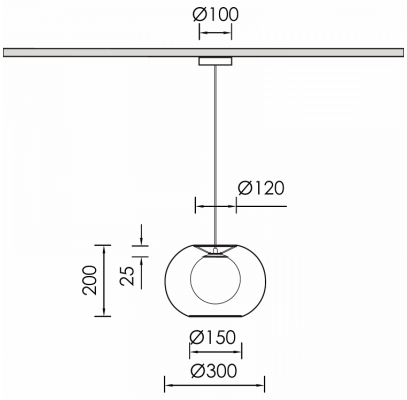


## Product Details

Source Type E27 lamp

### General Information

| | |
|---|---|
| Housing | Synthetic rattan |
| Product code | DES0403CL001 |
| Product family | VERTO |
| Height | 200 mm |
| Diameter | 300 mm |

### Electrical data

### Luminaire Output

### Light distribution

### Safety characteristics

| | |
|---|---|
| IP | 54 |

### Temperature Operating Conditions