VERTO 30



Technical drawings

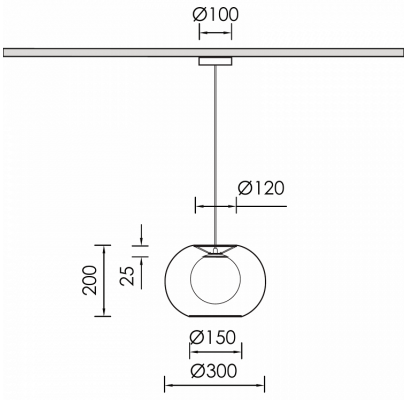

Product Details

Source Type E27 lamp

General Information

Housing	Synthetic rattan
Product code	DES0403CL010
Product family	VERTO
Height	200 mm
Diameter	300 mm

Electrical data

Luminaire Output

Light distribution

Safety characteristics

IP	54

Temperature Operating Conditions