HEADOFFICE: Showroom 13 Sofokli Venizelou Ave., Likovrisi, P.O. Box 14123, Athens, Greece Tel: (+30) 210 2851 304 I www.bright.gr I info@bright.gr

VERTO FLOOR



Technical drawings

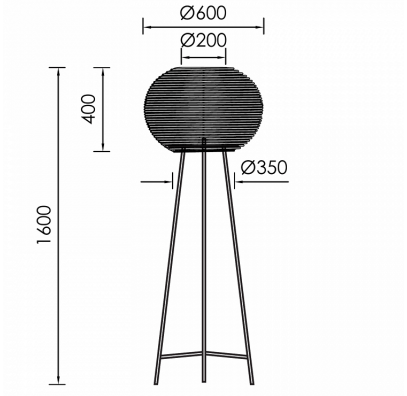

Product Details

Source Type E27 lamp

General Information

Housing	Synthetic rattan
Product code	DEF0056CL010
Product family	VERTO
Height	1600 mm
Diameter	600 mm

Electrical data

Luminaire Output

Light distribution

Safety characteristics

IP	54

Temperature Operating Conditions