HEADOFFICE: Showroom 13 Sofokli Venizelou Ave., Likovrisi, P.O. Box 14123, Athens, Greece Tel: (+30) 210 2851 304 I www.bright.gr I info@bright.gr

VERTO TABLE



Technical drawings

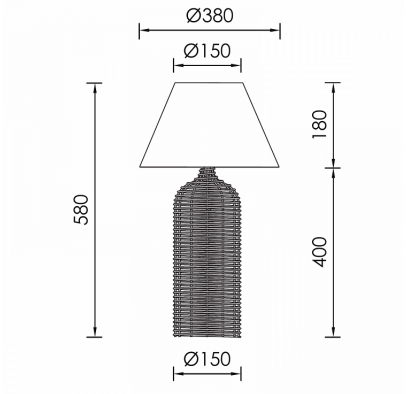

Product Details

Source Type E27 lamp

General Information

Housing	Natural rattan
Product code	DET0081CL010
Product family	VERTO
Diffuser	Linen fabric
Height	580 mm
Diameter	380 mm

Electrical data

Luminaire Output

Light distribution

Safety characteristics

IP	20

Temperature Operating Conditions